CASAFLEX UNO range

Heating, 16 to 25 bar

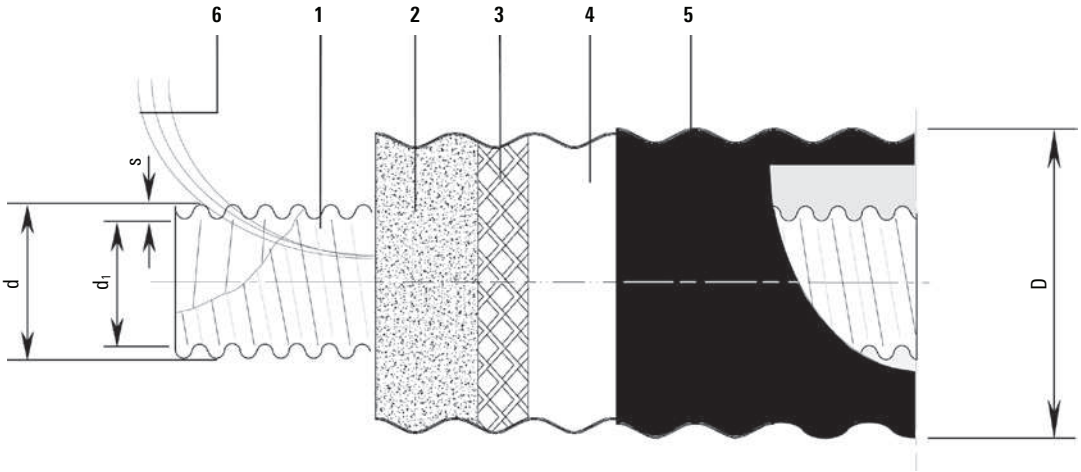

Structure

1 Stainless steel carrier pipe
2 PIR foam
3 Expanded metal mesh
4 Barrier film
5 PE-LD casing
6 Monitoring wires

CASAFLEX UNO

Type	DN	Inches	Inner pipe d x d_1 x s	Outer casing D	Minimum Bending radius	Volume Inner pipe	Weight	Maximum delivery lengths Coil[1]	Coil[2]	Coil[3]	Coil[4]
		″	mm	mm	m	l/m	kg/m	m	m	m	m
22/ 91	**20**	¾″	25 x 22 x 0.3	91	0.8	0.44	1.30	320	480	560	–
30/111	**25**	1″	34 x 30 x 0.3	111	1.0	0.80	1.93	205	290	360	–
39/126	**32**	1 ¼″	44 x 39 x 0.4	126	1.2	1.35	2.60	155	230	250	–
48/126	**40**	1 ½″	55 x 48 x 0.5	126	1.2	2.04	2.92	155	230	250	–
60/142	**50**	2″	66 x 60 x 0.5	142	1.3	3.12	3.54	100	150	200	–
75/162	**65**	2 ½″	86 x 75 x 0.6	162	1.8	5.12	4.80	55	100	145	–
98/162	**80**	3″	109 x 98 x 0.8	162	1.8	8.43	5.70	55	100	145	–
127/202	**100**	4″	143 x 127 x 0.9	210	2.8	14.30	8.80	–	40	–	75

1) Coil dimensions Ø 2800 x 800 mm (width)
2) Coil dimensions Ø 2800 x 1200 mm (width)
3) Coil dimensions Ø 3000 x 1200 mm (width)
4) Coil dimensions Ø 3000 x 1400 mm (width)
Supplied in drums on request

T-joint

CASAFLEX connected to pre-insulated steel pipe

Structure of T-joint

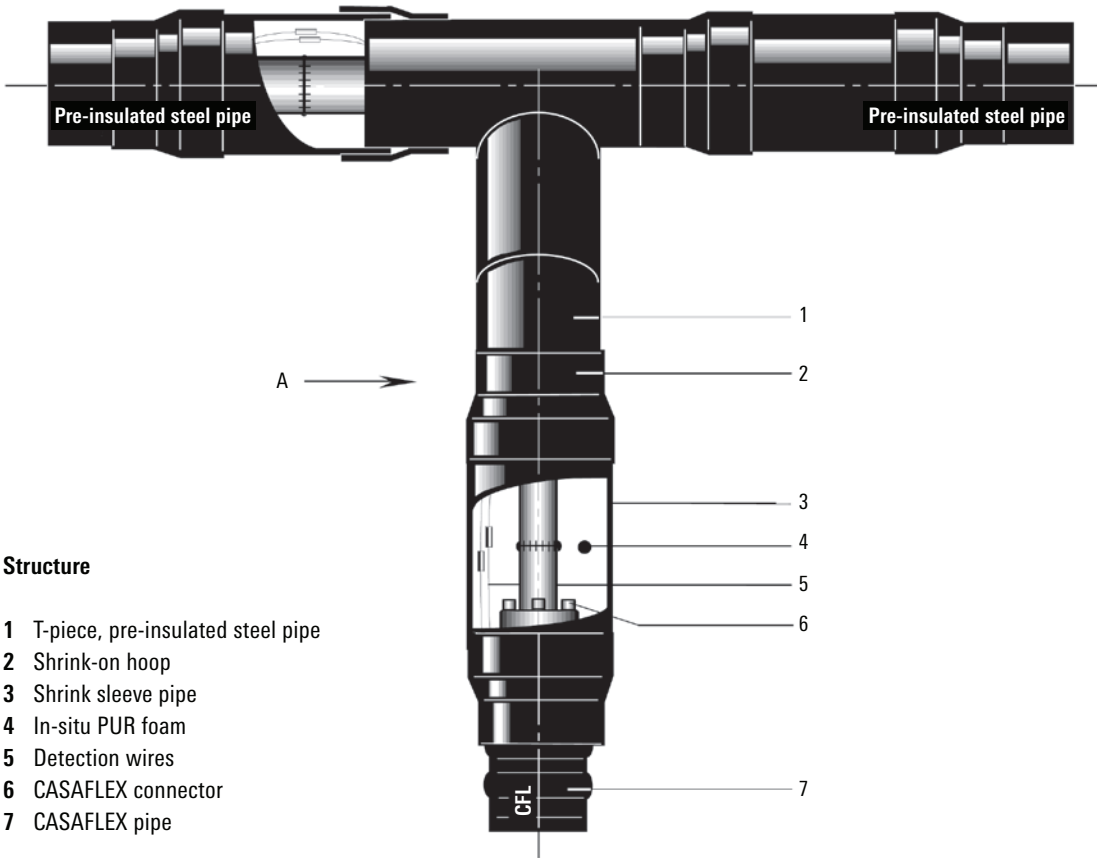

Structure

1 T-piece, pre-insulated steel pipe
2 Shrink-on hoop
3 Shrink sleeve pipe
4 In-situ PUR foam
5 Detection wires
6 CASAFLEX connector
7 CASAFLEX pipe

View A

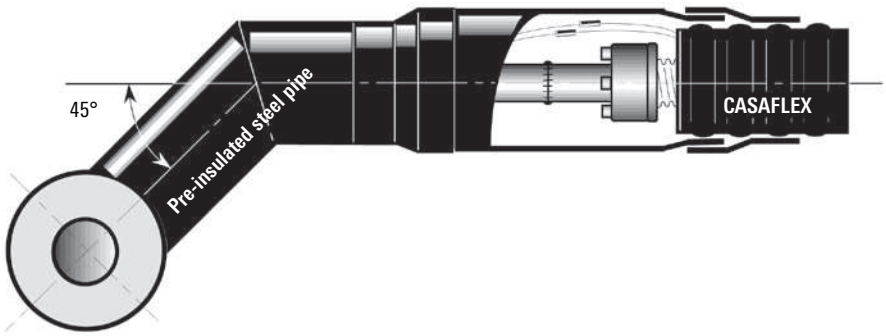

BRUGG PIPESYSTEMS
Flexible solutions

Flex-T-branch, 45°

Branch, main pipe

CASAFLEX to steel pipe – 45° connection

Type designation
e.g.: Swing joint,160/140
160 = $Ø_A$ main pipe
140 = $Ø_A$ junction

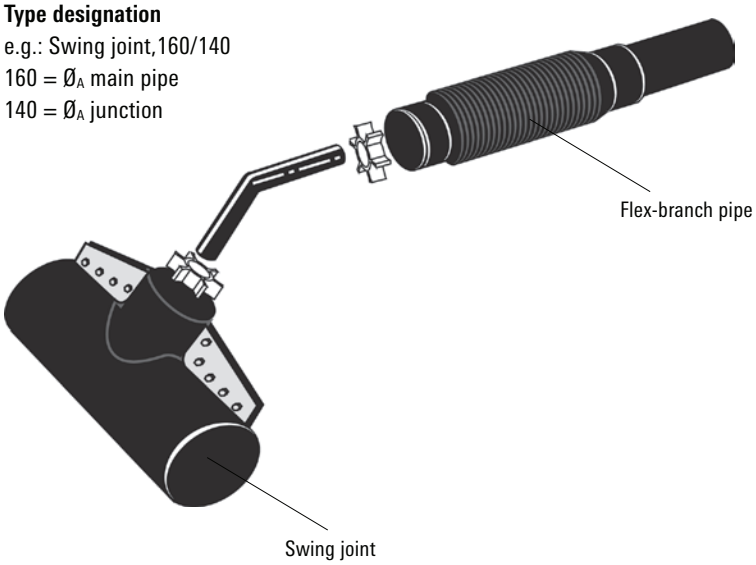

T-branch, steel pipe with CASAFLEX junction

Main pipe $Ø_A$ mm	Junction $Ø_A$ mm	Branch pipe Type	Swing joint Type
110	90	90	110/ 90
125	90 or 110	110	125/110
140	90 or 110	110	140/110
140	125	125	140/125
160	90 or 110	110	160/110
160	125 or 140	140	160/140
180	90 or 110	110	180/110
180	125 or 140	140	180/140
200	90 or 110	110	200/110
200	125 or 140	140	200/140
225	90 or 110	110	225/110
225	125 or 140	140	225/140
250	90 or 110	110	250/110
250	125 or 140	140	250/140
280	90 or 110	110	280/110
280	125 or 140	140	280/140
315	90 or 110	110	315/110
315	125 or 140	140	315/140

Supplied on request.

Joint

CASAFLEX to CASAFLEX joint

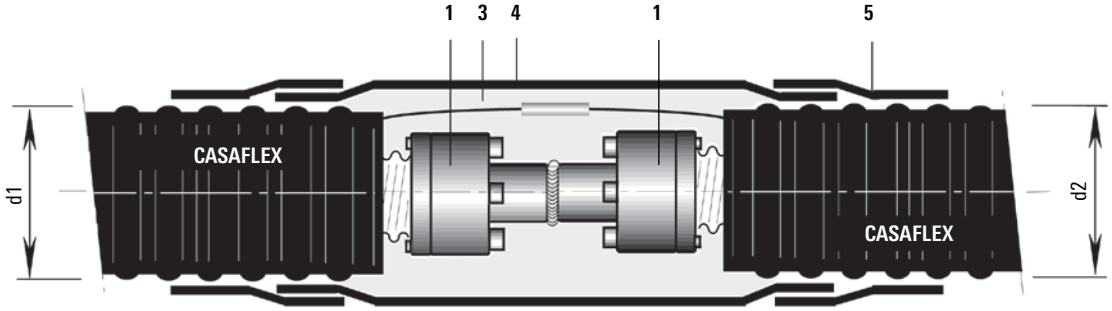

Ø inner pipe identical

CASAFLEX to steel pipe joint

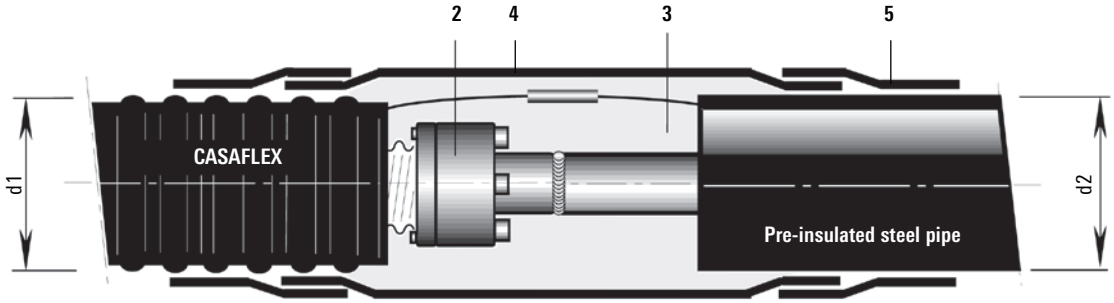

Structure

1 Through coupling (2 connectors, welded by customer or others)
2 ME connector; see sheet CFL 4.335, item 3
3 Insulating material (PUR foam); see sheet CFL 4.345
4 Shrink sleeve pipe
5 Shrink hose

CASAFLEX – CASAFLEX

d2		91	111	126	142	162	182	202
d1	91	X						
	111		X					
	126			X				
	142				X			
	162					X		
	182						RMBD	
	202							RMBD

* further joint systems and reduction sleeves are available on request

CASAFLEX – steel pipe

d2		90	110	125	140	160	180	200
d1	91	X	X	X				
	111	X	X	X				
	126			X	X			
	142				X	X		
	162					X		
	182						RMBD	RMBD
	202							RMBD

Figures in mm

BRUGG PIPESYSTEMS
Flexible solutions

Connector

CASAFLEX UNO, DN 20 - DN 80 (PN 16)

The CASAFLEX connector is specifically designed for CASAFLEX district heating pipes. It is used to make all connections on pipe installations in buildings and shafts and for through-type and T-joints. The connectors are intended for hot water pipes up to operating pressures of 16 bar.

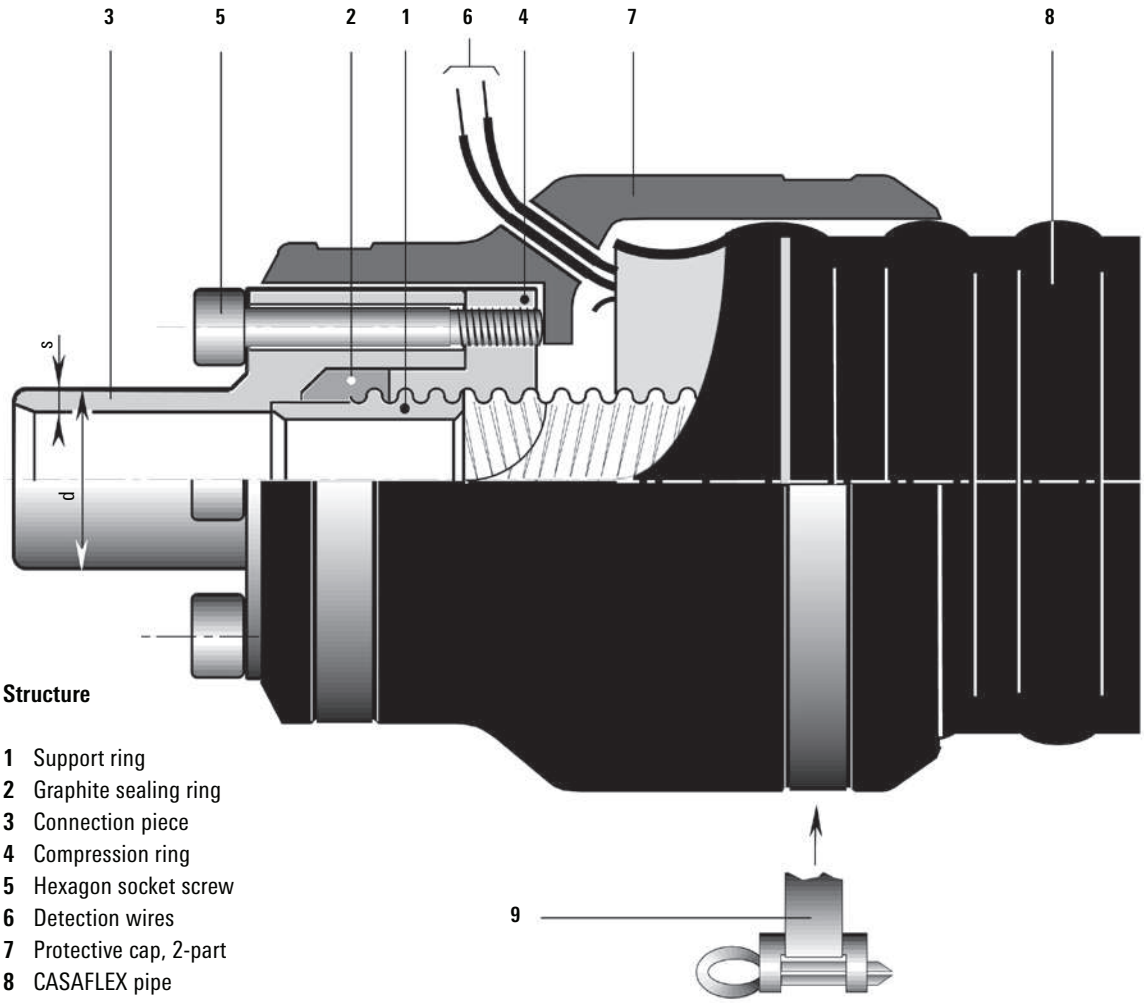

Structure

1 Support ring
2 Graphite sealing ring
3 Connection piece
4 Compression ring
5 Hexagon socket screw
6 Detection wires
7 Protective cap, 2-part
8 CASAFLEX pipe
9 Retainer strap

CASAFLEX UNO / PN 16

Type	DN	Inches	Pipe connection d x s
		″	mm
22/ 91	**20**	¾″	26.9 x 2.6
30/111	**25**	1″	33.7 x 3.2
39/126	**32**	1 ¼″	42.4 x 3.2
48/126	**40**	1 ½″	48.3 x 3.2
60/142	**50**	2″	60.3 x 3.6
75/162	**65**	2 ½″	76.1 x 3.6
98/162	**80**	3″	88.9 x 4.0

Uses

Type	Execution
Dry building	as per drawing
T-piece/joint	Pos. 7, no protective cap
Shaft	see CFL 4.530

BRUGG PIPESYSTEMS
Flexible solutions

Accessories

PUR foam containers, pipe warning tape

PUR foam containers
The required quantity of CFC-free polyurethane foam is delivered in suitable container sizes for the various joints and T-pieces. The components are supplied separately in two bottles and are only mixed together when needed.

Important:
Please note the safety regulations in the installation instructions supplied with the product.

Synthetic gloves

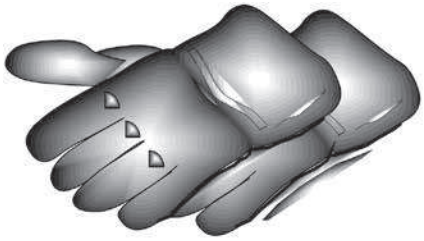

Protective goggles

Important:
The PUR foam can be used up to a maximum temperature of 130 °C. For higher operating temperatures (max. 160 °C), please consult BRUGG.

Pipe warning tape
Pipe warning tape to be laid in the ground
Standard roll length: 250 m

Installation depth; see sheet CFL 4.505

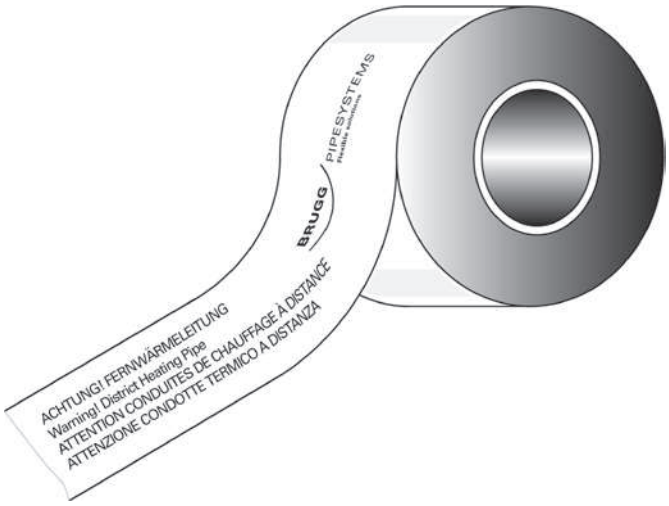

Wall seal

for wall openings

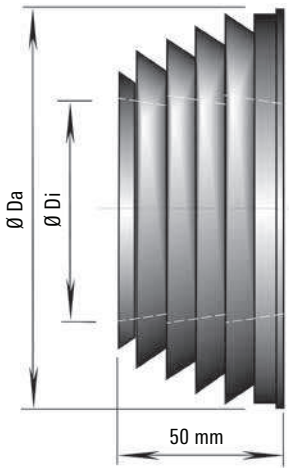

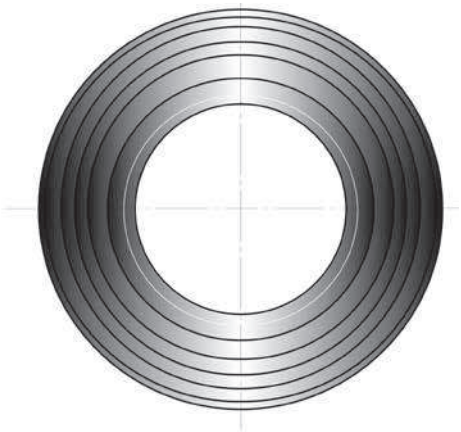

CASAFLEX UNO/DUO

Outer casing diameter	Neoprene wall sealing ring	
	Ø Di, inner	Ø Da, outer
mm	mm	mm
91	93	133
111	113	153
126	128	168
142	144	183
162	164	203
182	183	223

Building entry (see sheet CFL 4.520)

BRUGG PIPESYSTEMS
Flexible solutions

Trench dimensions

Trench profile, CFL UNO

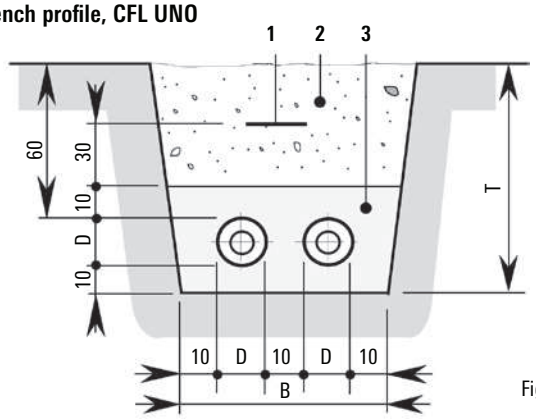

Figures in cm

CASAFLEX Outer casing Ø D mm	Width B cm	Depth T cm	Minimum Bending radius m
91	50	80	1.0
111	55	85	1.0
126	55	85	1.2
142	60	85	1.5
162	65	90	1.8
202	70	95	2.8

Trench profile, CFL DUO

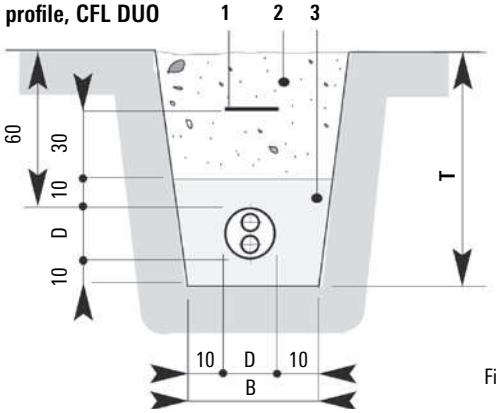

Figures in cm

CASAFLEX Outer casing Ø D mm	Width B cm	Depth T cm	Minimum Bending radius m
111	30	85	1.1
126	35	85	1.4
142	35	85	1.5
162	35	90	1.8
182	38	90	2.0

Installation depth

Max. installation depth: 2.6 m
Our approval is required for deeper installations.

SLW 30 ≙ 300 kN total load to DIN 1072;
if subject to higher traffic loads (e.g. SLW 60), a load-distributing superstructure as per RSt037 is required.
With no traffic load, the minimum trench depth T can be reduced by 20 cm.

Ground plan of trench for house connection

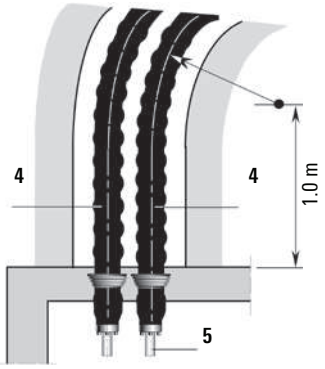

Structure

1 Pipe warning tape; see sheet CFL 4.345
2 Excavated material, compactable
3 Sand, washed, grain size 0 - 8 mm
4 CASAFLEX district heating pipe
5 Connector; see sheet CFL 4.330 - CFL 4.350

X = 1m when connecting a T-piece to CFL
or 3m when connecting a T-piece to KMR
A = Pipe distance see sheet PRE 6.500

When connecting KMR DUO to CASAFLEX DUO the same dimensions are valid for one pipe axis

Ground plan of trench for T-piece connection

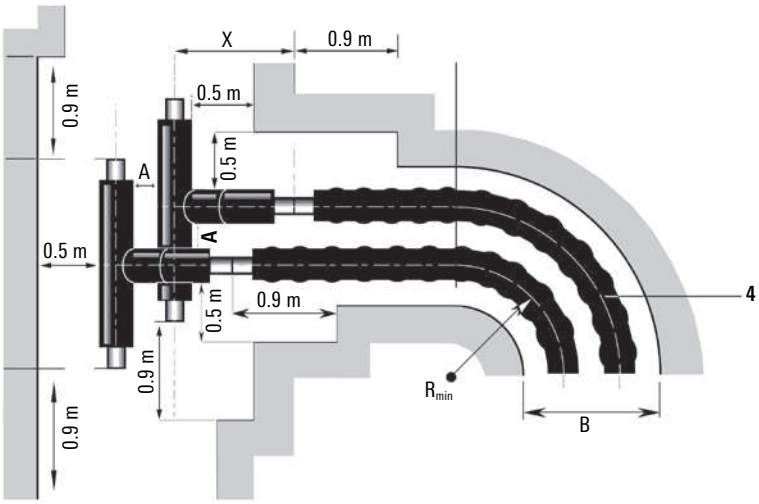

BRUGG PIPESYSTEMS
Flexible solutions

Connection (rigid/flexible)

CASAFLEX – pre-insulated steel pipe

Installation instructions for transition from CASAFLEX to pre-insulated steel pipe

1. Junction with T-piece

All figures in m

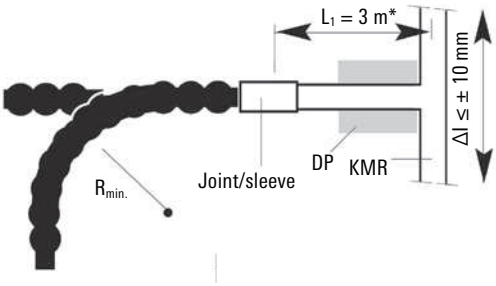

The transverse expansion ΔI must not exceed the expansion that can be accommodated by junction pipe L1 and the CASAFLEX pipes.

2. Transition with fixed point

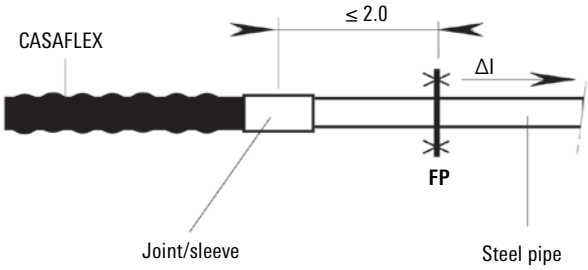

The expansion ΔI of the plastic casing pipe (due to the increase in temperature) cannot be compensated by the CASAFLEX pipes. Installation requires a fixed point.

3. Transition with Z-bend

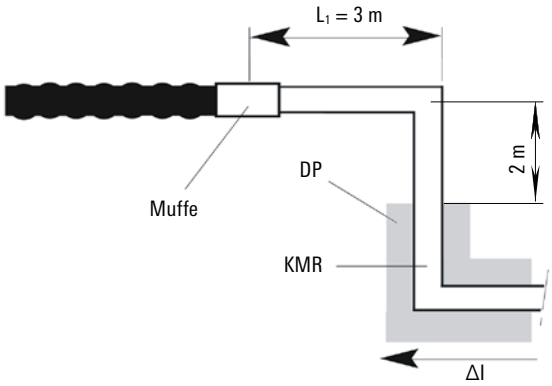

Static design of the Z-bend according to expansion variable ΔI.

4. Transition with expansion bend

All figures in m

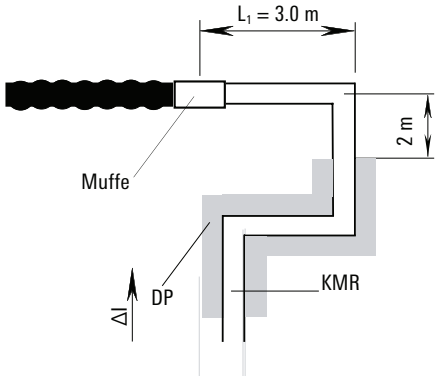

ΔI = Expansion
FP = Fixed point (pre insulated steel pipe)
EP = Expansion pad

- Design of expansion components
- Positioning of expansion pads
as per the section on PREMANT

BRUGG PIPESYSTEMS
Flexible solutions

Entry into building

Wall opening

All figures in mm

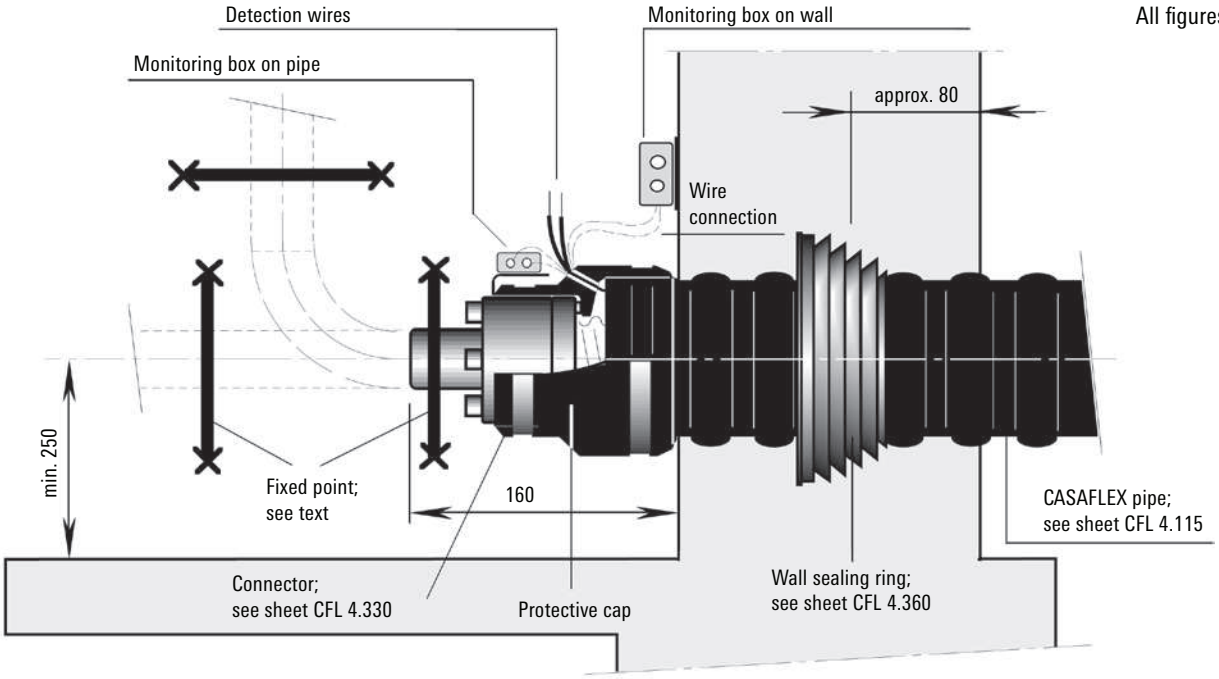

The connector and/or the CASAFLEX pipe are not suitable for accommodating expansion of ongoing pipes. A fixed point clamp must be fitted for this reason (see worksheet CFL 4.515).

Wall opening

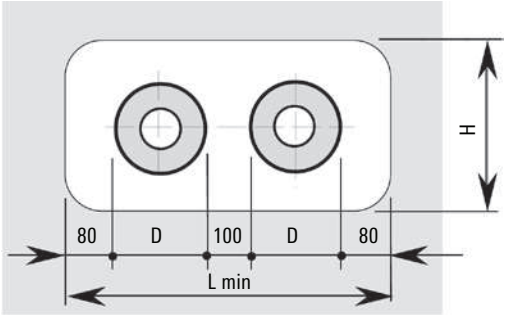

All figures in mm

Outer casing Ø D mm	L min mm	H min mm
91	500	300
111	500	300
126	550	300
142	600	350
162	650	350

Core bores for wall sealing rings

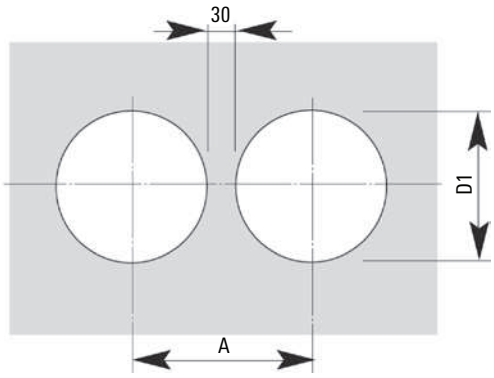

All figures in mm

Outer casing Ø D mm	D1 mm	A mm
91	200	230
111	220	250
126	240	270
142	260	290
162	280	310

BRUGG PIPESYSTEMS
Flexible solutions

BRUGG Rohrsysteme	FLEXWELL-Fernheizkabel®	FHK 3.306
	Hauseinführungsbogen	01.03.01

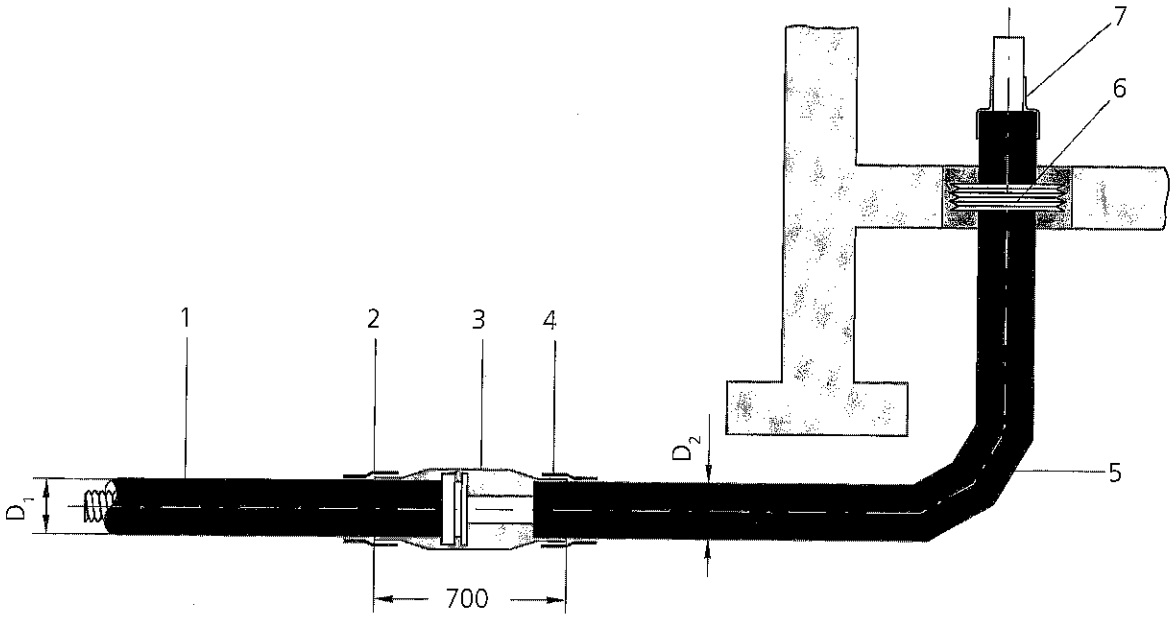

1 FLEXWELL-Fernheizkabel® mit Anschlussverbindung (A, DE oder GR)
2 Schrumpfmanschette
3 HD-PE-Schrumpfmuffe
4 Schrumpfmanschette
5 Bogen 90° vorisoliert, 1.5 x 1.5 m, Stahl oder Edelstahl
6 Labyrinthdichtung
7 Endkappe

FHK-Typ	FHK-Aussen-Ø D_1 [mm]	Bogenabmessungen DN / D_2 [mm]
30/91	94	25/90
30/116	121	25/110
39/116	121	32/110
39/148	156	32/125
60/148	156	50/125
75/171	178	65/140
98/171	178	80/160
98/220	233	80/200
127/220	233	100/200
147/220	233	125/225
200/310	313	150/250

alle Masse in mm

- Technische Änderungen vorbehalten -